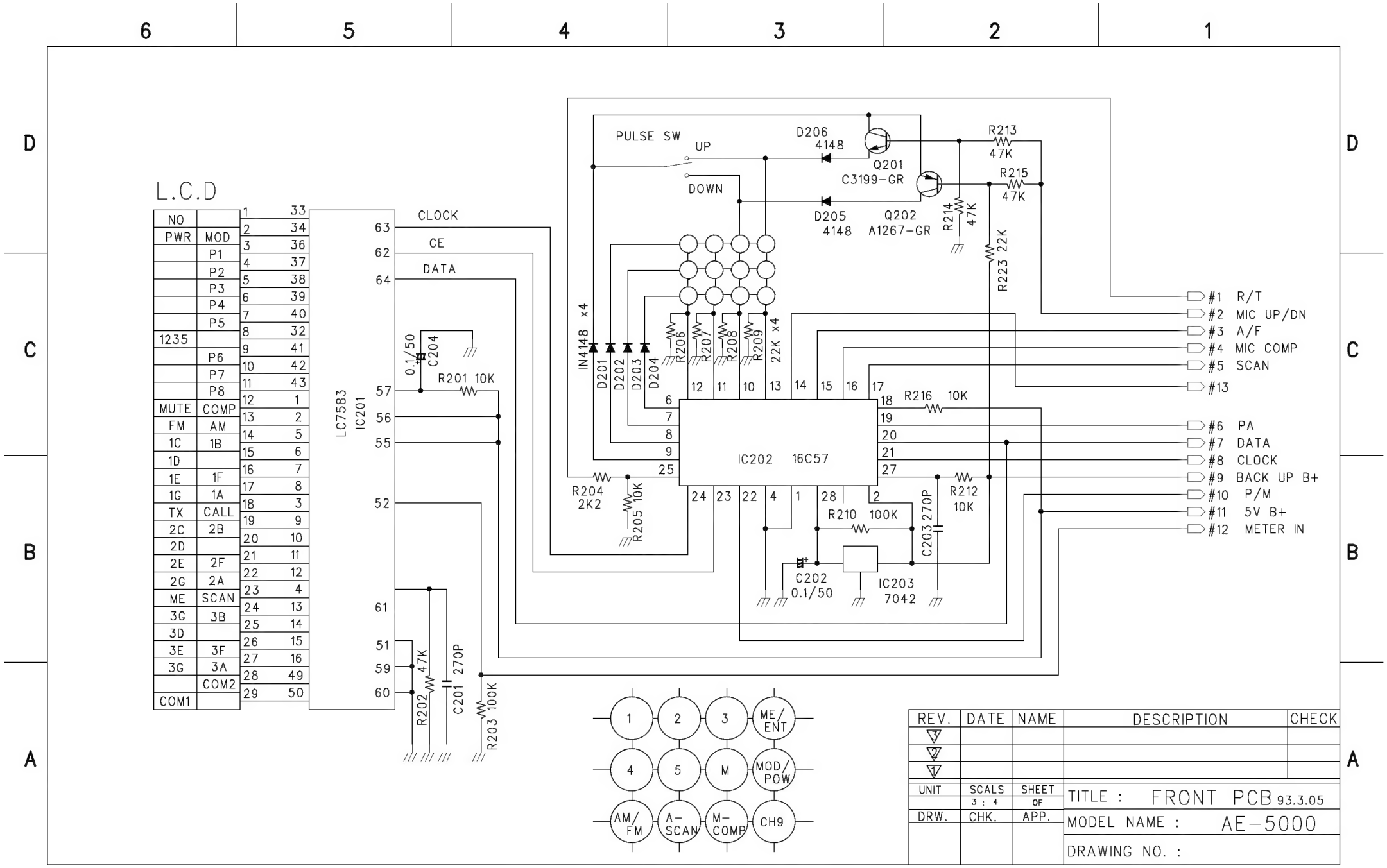
L.C.D
NO
PWR
MOD
P1
P2
P3
P4
P5
1235
P6
P7
P8
MUTE
COMP
FM
AM
1C
1B
1D
1E
1F
1G
1A
TX
CALL
2C
2B
2D
2E
2F
2G
2A
ME
SCAN
3G
3B
3D
3E
3F
3G
3A
COM2
COM1
LC7583
IC201
CLOCK
CE
DATA
R201 10K
C204 0.1/50
R202 47K
C201 270P
R203 100K
PULSE SW
UP
DOWN
D206 4148
D205 4148
Q201 C3199-GR
Q202 A1267-GR
R213 47K
R215 47K
R214 47K
R223 22K
IN4148 x4
D201
D202
D203
D204
R206
R207
R208
R209
22K x4
IC202 16C57
R204 2K2
R205 10K
R216 10K
R212 10K
R210 100K
C203 270P
C202 0.1/50
IC203 7042
#1 R/T
#2 MIC UP/DN
#3 A/F
#4 MIC COMP
#5 SCAN
#13
#6 PA
#7 DATA
#8 CLOCK
#9 BACK UP B+
#10 P/M
#11 5V B+
#12 METER IN
1
2
3
ME/ ENT
4
5
M
MOD/ POW
AM/ FM
A- SCAN
M- COMP
CH9
REV.
DATE
NAME
DESCRIPTION
CHECK
UNIT
SCALS
3 : 4
SHEET
OF
DRW.
CHK.
APP.
TITLE : FRONT PCB 93.3.05
MODEL NAME : AE-5000
DRAWING NO. :